Instructions for use

HOME DELUXE
WIR MACHEN ZUHAUSE

Outdoor whirlpool NIMBUS



Designed in Germany

IMPORTANT
KEEP FOR FUTURE REFERENCE.
READ CAREFULLY!

Table of contents

1. General information 3
1.1. Product overview 3
1.2. General notes 3
1.3. Guarantee 3
2. Information on the instructions for use 4
2.1. Availability of the instructions for use 4
2.2. Target groups of the instructions for use 4
2.3. Information on the translation 4
2.4. Explanation of symbols 4
2.5. General information on the instructions for use 5
2.6. Intended use 5
2.7. Safety instructions 5
3. Product features 7
3.1. Technical data 7
3.2. Product overview 8
4. Assembly of the product 9
4.1. Safety instructions 9
4.2. Structure of the product 9
5. Application 13
5.1. Safety instructions 13
5.2. Control element 15
6. Maintenance and care 23
6.1. Safety instructions 23
7. Dismantling 24
7.1. Safety instructions 24
8. Waste disposal 24
Electrical and electronic equipment - Information for private households 25

Dear customers,

Thank you for choosing a product from **Home Deluxe GmbH.** We hope you enjoy your new NIMBUS outdoor hot tub.

The instructions for use support you in the installation, commissioning, operation and maintenance of the product. The instructions for use and the safety instructions must be read carefully and in full. Observe these instructions to avoid hazards.

1. General information

1.1. Product overview

Model:
Outdoor whirlpool NIMBUS | Item ID: 25472 | Variant ID: 60972

1.2. General notes

In order to fulfil our claim, we are constantly improving quality, simplifying installation and operation and adapting the products to customer requirements. Due to these changes, the current version of the instructions for use can be found on our homepage.

The term "product" is used in the instructions for use for the "Outdoor whirlpool NIMBUS".

1.3. Guarantee

The statutory liability for defects and warranty rights apply from the date of purchase.
Home Deluxe GmbH accepts no liability for damage caused by non-compliance with the instructions for use. Complaints arising from improper installation or use are excluded from the warranty. In the event of defects in the product, please contact our customer service in writing using the contact form on our homepage, stating the product name, serial number and a photo of the type plate:

Home Deluxe GmbH
Schanzeweg 2
32312 Lübbecke
Germany
Tel: +49 (0)5743 6181-0
www.home-deluxe-gmbh.de

If you have any further questions, please contact our customer service team using the contact form.

2. Information on the instructions for use

2.1. Availability of the instructions for use

The instructions for use are part of the product and should be kept complete and in the immediate vicinity of the product.

2.2. Target groups of the instructions for use

The instructions for use must be read and observed by every person involved in one of the following activities or uses:

- Unpacking
- Assembly / Installation
- Commissioning / Operation
- Maintenance / inspection / care
- Troubleshooting / repair
- Waste disposal

2.3. Information on the translation

The original instructions for use were written in German. Any other language available is a translation of the German version.



There is a "**Certificate of Quality**" in the enclosed box. This must be kept, as this number makes it easier to process complaints.

2.4. Explanation of symbols

Symbol	Explanation of symbols
	**WARNING** The symbol indicates possible dangers that could result in fatal or serious injuries. Before carrying out the corresponding installation or application step, read the corresponding note.
	**INFO** The symbol provides important information and indicates material damage. Observe these before carrying out the corresponding installation or application step in order to understand problems and avoid damage.
	**CE labelling** The symbol declares the conformity of the product with the applicable requirements of the European Community. The current declaration of conformity is available on request from Home Deluxe GmbH.
	**Read instructions for use** The symbol indicates that the operating instructions must be read carefully before mounting/installing and/or operating the appliance.
	**Disposal of electrical and electronic appliances** Electrical and electronic appliances must not be disposed of with household waste!

Symbol	Explanation of symbols
	**Risk of drowning** The symbol indicates that children and persons with reduced physical, sensory or mental capabilities or lack of experience and knowledge must not enter the water unsupervised.
	**Supervise children in water facilities** The symbol indicates that children in water facilities must be supervised by adults.
	**No diving** The symbol indicates that jumping headfirst into the water is prohibited. It is possible to collide with other people in the water.
	**Do not touch the nozzles** The symbol indicates that you must not reach into the nozzles.
	**Protection class I** The symbol indicates that all conductive housing parts of the equipment must be connected to the protective conductor system of the fixed electrical installation. It is a protective earthing. In the event of a fault current, the circuit is de-energised by a fuse.
	**Alternating current** The symbol indicates that the product is operated with alternating current.

2.5. General information on the instructions for use

The operating instructions refer to the NIMBUS outdoor whirlpool. It contains important information on installation, operation, maintenance and cleaning. The instructions for use, in particular the safety instructions, must be read carefully before using the product; keep the instructions for use in a safe place. Only use the product as described in these instructions for use to prevent accidental injury or damage. If you pass the product on to third parties, these instructions for use must also be handed over.

2.6. Intended use

The product is of high quality, durable and intended or suitable exclusively for private use to a reasonable and customary extent. Furthermore, our product is **not** intended for commercial use. Commercial use is only permitted with the written authorisation of Home Deluxe GmbH.

The outdoor whirlpool is intended for outdoor use and is used for bathing and wellness. The steps are intended exclusively as an access aid for the outdoor whirlpool. The thermal cover is intended exclusively as a cover for the outdoor whirlpool. This outdoor whirlpool and the accessories must not be used by children without adult supervision.

Only use the product as described in these instructions for use. Any other use is considered improper and may result in damage to property or personal injury. The manufacturer accepts no liability for damage caused by improper or incorrect use.

2.7. Safety instructions

General hazard warnings



- Improper handling can lead to considerable personal injury and damage to property. For

this reason, assembly, installation, commissioning, troubleshooting, maintenance and repair work may only be carried out by qualified persons.

- **Only** install the product if the scope of delivery is complete and in perfect condition.
- Ensure that all parts are undamaged and correctly installed. There is a risk of injury if they are not installed correctly. Damaged parts can affect the safety and function.
- Only place the product on a safe, level and firm surface.
- The product can be used by children aged from 8 years and above and persons with reduced physical, sensory or mental capabilities or lack of experience and knowledge if they have been given supervision or instruction concerning use of the appliance in a safe way and understand the hazards involved.
- **Danger to life due to electrical voltage:** No electrical devices may be set up or operated in the immediate vicinity (distance approx. 1.5 m) of the product.
- **Danger to life due to electrical voltage:** No electrical devices may be taken into the product.
- **Danger to life due to electrical voltage:** Install appliances at least 1.5 m away from all metal surfaces, alternatively an appliance can be installed within 1.5 m of metal surfaces if the metal surface is permanently and properly earthed by a solid copper conductor of at least 1.0 mm$^{(2)\ in}$ accordance with all regulations.
- Stop operation immediately if components and/or the mains connection cables are damaged, contact customer service or have the mains connection cable replaced by a qualified electrician.

Keep pets away from the product.

Danger for children

- Keep children away from packaging materials. There is a risk of suffocation!
- Do not allow children to play in or on the product, keep children away from the product.
- **Risk of falling:** Children must not climb onto the thermal cover when it is resting on the product.
- Do not place the product directly or in the immediate vicinity of a play area.
- Explain to the children how to use the product correctly and never leave them unsupervised while playing.
- When the product is not in use or is unsupervised, remove all toys from the product and its surroundings to avoid drawing children's attention to the product.
- **Risk of swimming accidents (especially children under the age of 5).** Care must be taken to ensure that children are not allowed unauthorised access. This can be achieved by having an adult supervisor monitor access to the bathing area or by installing a bathing safety guard.
- Cleaning and user maintenance must not be carried out by children without supervision.

Risk of injury

Improper handling of the whirlpool tub can lead to injuries

- Do not make any design changes to the product. Any modification must be authorised by the manufacturer and carried out in accordance with the manufacturer's instructions.
- Ensure that the product is permanently installed securely to avoid injury.
- **Danger to life due to electrical voltage**: To avoid the risk of electric shock, all installations and corresponding maintenance work must be carried out by a qualified electrician.
- **Danger to life due to electrical voltage:** There is an immediate danger to life if live parts are touched. Damage to the insulation or individual components can be life-threatening. -> If the insulation is damaged, switch off the power supply immediately and arrange for

repairs.
- If the mains cable for the power supply is damaged, take the product out of operation until the mains cable is replaced by the manufacturer, customer service or a qualified electrician.

Risk of damage



- Do not open the packaging with sharp objects (e.g. knives, scissors or similar) as this may damage the product. Be careful when opening.
- Improper handling of the product can lead to damage.

Explosion hazard



- In the event of a fire, inform the fire brigade immediately and make sure that there are no people in the product.
- **Caution**: Do not store highly flammable, combustible or explosive substances inside the product. Highly flammable substances can catch fire.

3. Product features

3.1. Technical data

Outdoor whirlpool NIMBUS	
Tension	220 - 240 V AC
Frequency	50HZ
Overall performance	3508 W
Heat output	2000 W
Pump capacity	1500 W
Protection class	I
Whirlpool dimensions (L x W x H)	1900 x 1400 x 700 mm
Filling quantity	950 l
Persons	max. 2 persons
Empty weight whirlpool tub	153 kg

3.2. Product overview

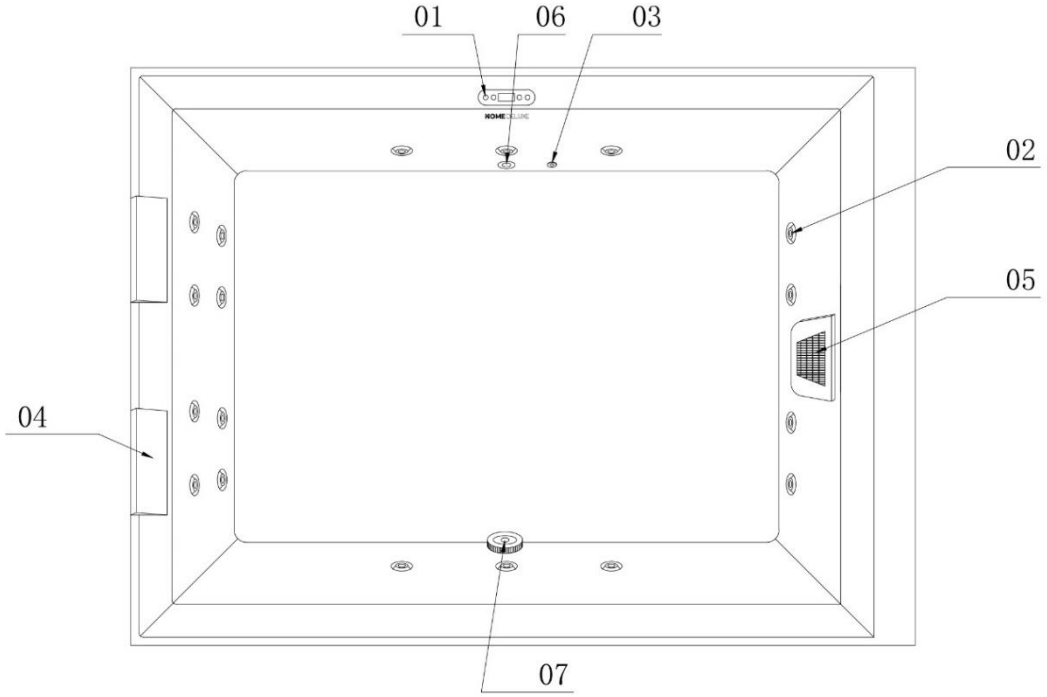

No.	Article description	Quantity
01	Display	1
02	2" black massage jets	18
03	Ozone	1
04	Headrest	2
05	Filters	1
06	Underwater lighting	1
07	Water return	1

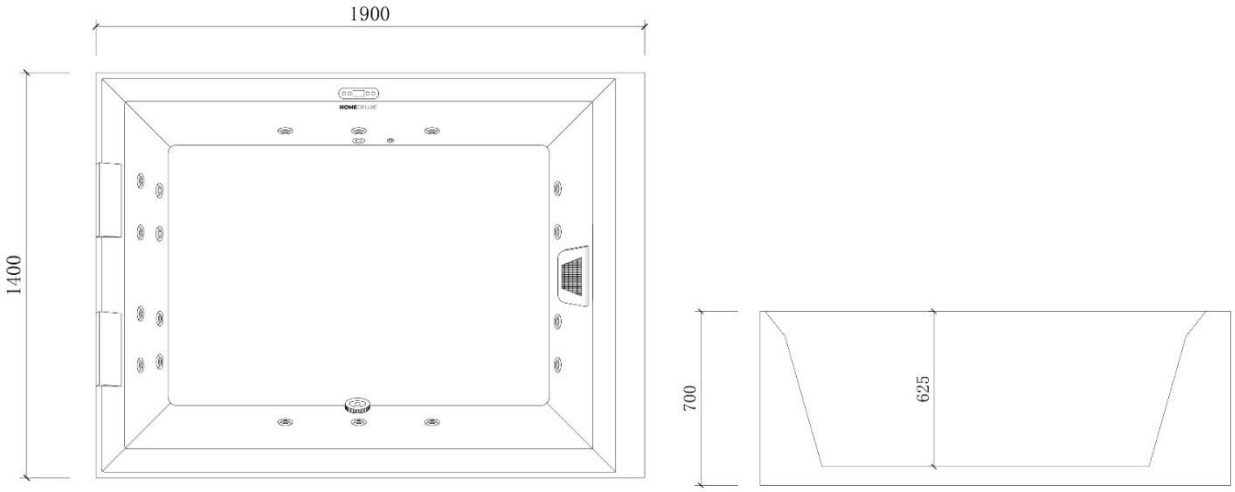

4. Assembly of the product

- Read the following instructions carefully.
- The product is delivered in several packages. Please make sure that the packages are opened at the top. Be very careful when opening the parcels as there are fragile parts in the parcels.

Installation site

- Mount the product on a safe, level and firm surface.
- For maintenance and repair work, sufficient distance should be kept from permanently installed objects or walls. **Recommendation**: approx. 1 m from all sides.
- Applicable regulations must be adhered to.
- The substrate must be load-bearing and have a slight slope to a drain so that any leaking water is drained away from the product and can be channelled into the sewer.
- The product is suitable for outdoor use.
- If you are unsure, consult a specialist and seek advice.

Please note the heavy weight (product + water + people), we accept no liability for any damage caused by the weight.

4.1. Safety instructions

The following health and safety information must be read carefully.

Risk of injury

Improper handling during installation can lead to injuries

- Your product will be delivered in several parcels. Please make sure that the parcels are opened at the top. Be very careful when opening the parcels as there are fragile parts and glass in the parcels.
- **Only** install the product if the scope of delivery is complete and undamaged.
- Improper handling can lead to considerable personal injury and damage to property. For this reason, assembly, installation, commissioning, troubleshooting, maintenance and repair work may only be carried out by qualified persons.
- If the installation is **not** carried out in a detached house, a clearly visible emergency stop switch must be fitted. The switch should be clearly visible and within reach at a distance of approx. 1.50 metres
- The product must always be equipped with a protective circuit.
- The correct cabling of the GFCI and the main connection strip of the control unit are safety-relevant!
- Check the legal requirements of the country. Use copper cables of the prescribed thickness (never aluminium).
- Only place the product on a safe, level and firm surface.
- To avoid injuries, at least 2 - 3 people are required to assemble the product.
- Wear protective clothing such as safety shoes and protective gloves during assembly.
- Keep children away from the assembly site while the product is being assembled. The scope of delivery contains small parts that can be swallowed or cause serious injury.

4.2. Structure of the product

The product can be assembled with little effort. Follow the assembly instructions carefully. The function and safety of the product cannot be guaranteed if the instructions are not followed.

Tighten hoses and clamps



Hint

Before commissioning the product, check all flexible hoses and all clamps on water-bearing components to ensure that they are firmly connected. If the clamp or connection can be moved, it must be tightened using a suitable tool.

To prevent unwanted water leaks or damage, a leak test should be carried out before finalising the installation.

Tightness of the hoses



To prevent unintentional water leaks, the clamps should be checked for tightness before finalising the installation. If necessary, the clamps should be tightened slightly, but not too tightly.

Connection of the product



Connection work must be carried out by a qualified electrician in accordance with DIN VDE 0100.

The product must be connected to a permanent, permanently installed power supply that complies with the general wet room regulations. The following diagram (connection diagram) shows the three possible connection variants for connecting your pool to the power supply.

When installing the electrical system, it is essential to ensure that the power connection complies with the applicable national regulations and that the voltage and frequency values specified by the manufacturer are adhered to.

All-pole disconnection with a contact opening width of at least 3 mm must be installed in the domestic electrical installation. This also applies to any additional and separate mains connection cables and their fuses. The protective earth conductor of the product must be connected to the protective earth conductor of the domestic installation.



Note

Independent modification of parts and electrical wiring of the product by the customer is prohibited and will invalidate all warranty claims.

The mains cable is not included in the scope of delivery.

Note

To avoid a short circuit or tripping of the RCD plug, we strongly recommend that you connect the product to a separately fused circuit. An overload can occur if several electrical appliances are operated simultaneously on the same line or if an extension lead is used. Please observe this recommendation when installing your whirlpool, sauna or infrared cabin. Further information can be found in the installation instructions and the technical data.

Remove side panelling

Loosen the screws at the bottom of the whirlpool side panelling. After loosening the screws, the side panelling can be removed.

Note: The long side of the side skirt (1900 mm) can only be dismantled if the short side of the side skirt (1400 mm) is dismantled first.







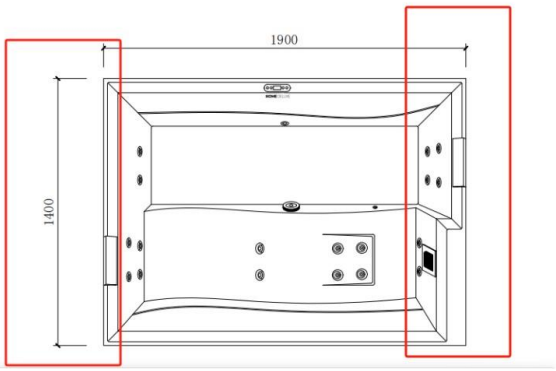

Control system

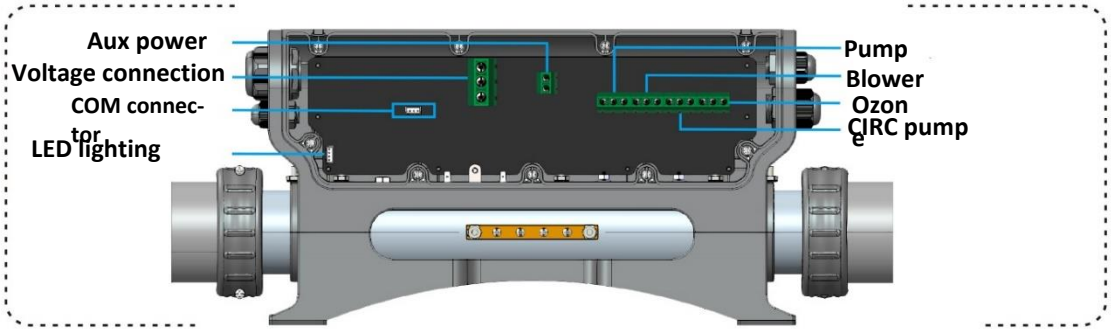

Connect the device to the power supply when the system is switched off.

Control circuit diagram

Voltage input : 220-240V~ 50Hz/60Hz 1Px32A

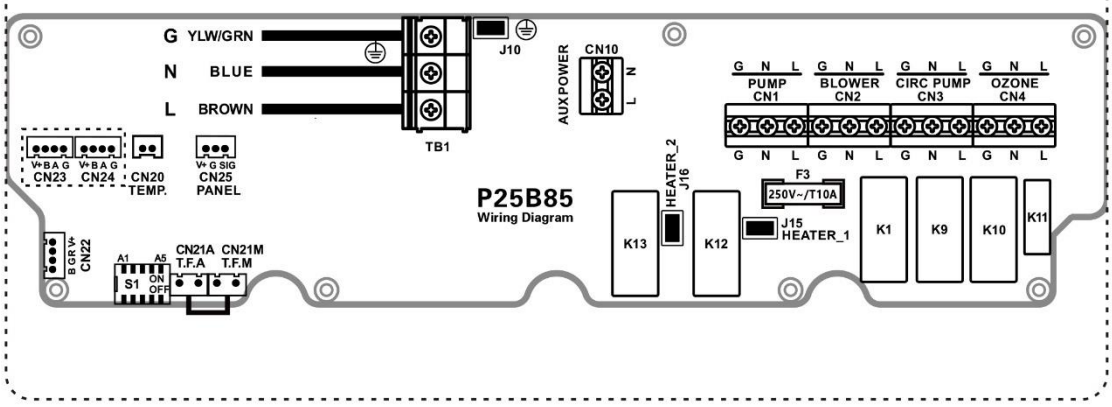

Voltage input : 240V~ 60Hz BLK and RED 32A

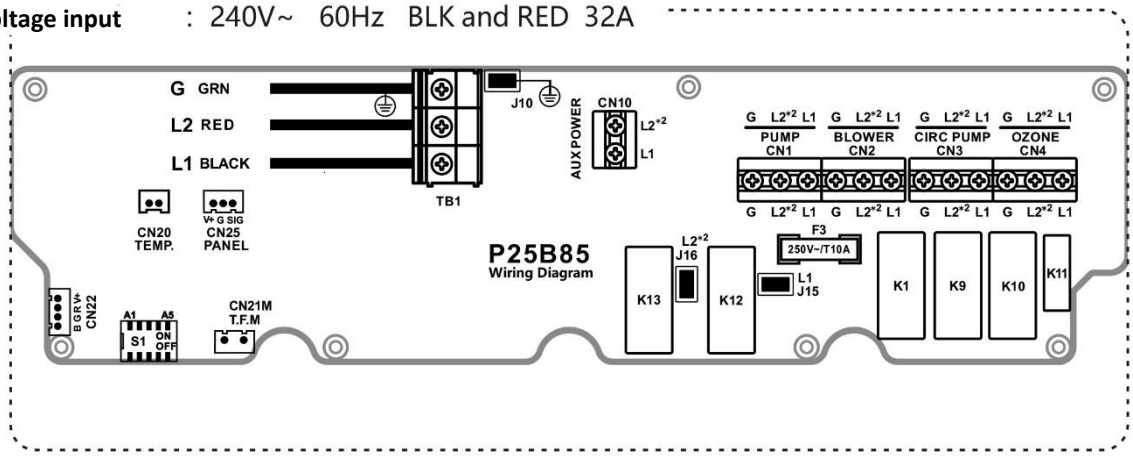

Configuration of the power limitation

It may be necessary to set "**A2"**, as the power is not limited ex works. If the customer wishes the output to be limited, the dip switch "**A2**" must be adjusted downwards. This prevents the heating and nozzle function/high speed from being switched on at the same time.

Configuration

Rocker switch A4 without function

Setting the switch bank S1 (ON▲ / OFF▼)

CN 22 four lines of RGB lights	**▲ A1 ▼**	**CN 22 two lines of lights**
Power limit	**▲ A2 ▼**	**Power not limited**
Pump 2 Output	**▲ A3 ▼**	**Blower output (CN2)**
N/A	**▲ A4 ▼**	**N/A**
Pump 1, 1 speed	**▲ A5 ▼**	**Pump 1, 2 Speed**

Select the correct loads according to the load parameter table!

Heating pump option (depending on switch A5)							
Circulation pump		Low pump speed					
Pump1 (1SPD)	CIRC pump	Pump1 (2SPD)	CIRC pump	Blower (Pump2)	Light	Ozon	AUX Power
10A MAX	2.5A MAX	HIGH: 10A MAX LOW: 2.5A MAX	N/A	10A MAX	12 VDC 15W MAX	1A MAX	1A MAX
CN1	CN3	L (HIGHT) - CN1 L (LOW) - CN3		CN2	CN22	CN4	CN10

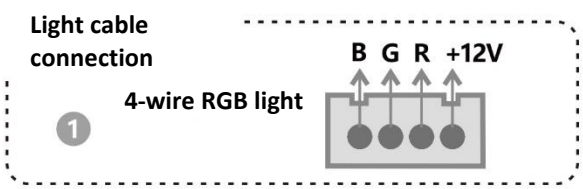

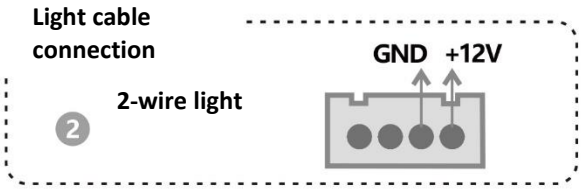

Wiring from the light



5. Application

5.1. Safety instructions

The following health and safety information must be read carefully.

Note:

- The product can be filled using a hose, as the product does not have an integrated water connection.
- **Caution!** Only plug the mains plug into the power supply when the product is filled to "**max.**" with water.

Risk of injury

Improper handling during operation can lead to injuries

- No changes may be made to the product.
- If you are not sure whether the product can or may be used, consult a doctor. If dizziness or a feeling of overheating occurs during use, leave the product immediately.
- People with cardiovascular problems, high blood pressure, diabetes or varicose veins may only use the product after consulting a doctor.
- Older people with high blood pressure or cardiovascular problems should avoid high water temperatures and be particularly careful.
- Consult a doctor in case of skin diseases or changes before use.
- Never use the product under the influence of medication, drugs, alcohol or after intensive sport.
- Always make sure that the water level is filled up to the "**max.**" mark.
- **Risk of slipping due to splashing water!** Pay attention to slippery floors in the area around the product.
- **Danger of slipping!** Make sure you have a firm footing when climbing the stairs.

- **Danger to life due to electrical voltage**: There must be no electrical appliances in the immediate vicinity of the product.
- **Danger to life due to electrical voltage**: No electrical devices may be taken into the product.
- **Danger to life due to electrical voltage**: Live devices that are accessible to the user must not exceed a voltage of 12 V. Earthed accessories must be permanently connected to fixed cables.



- Make sure the water temperature is appropriate.
- Check the fastening at regular intervals.
- Check the product for visible damage before each use.
- If the product is not used, whether filled with water or empty. We recommend putting on the thermal cover. This prevents rapid soiling. The temperature of the water will not drop as much.
- Do not use the product in bad weather (e.g. thunderstorms, storms, etc.).
- Make sure that no hair gets tangled around the filters, as this can clog the filters or other parts of the product. We recommend tying up long hair, for example.
- Avoid hair and dirt getting into the drainpipes, as this can lead to blockages.
- Untreated wastewater (without chemical treatment) can generally be drained without being channelled into the sewer. This water can be used for watering, for example.
- Water with added cleaning agents (chemically treated, e.g. oxygen tablets, etc.) must be discharged via an on-site waste water drain. In addition to this information, the legal requirements of the respective country must be fulfilled.
- The product may only be used by children under the supervision of a trained adult. The supervisor must be familiar with the warnings and they must be recognisable as such.
- Children must be supervised to ensure that they do not play with the product.
- Check the product for visible damage before each use.
- Live devices that are accessible to the user must not exceed a voltage of 12 V. Earthed accessories must be permanently connected to fixed cables.
- Devices containing electrical components, with the exception of remote controls, must be used or attached in such a way that they cannot fall into the product.

5.2. Control element

1.please connect the power supply.
2 Please only switch on the power when the water has reached the water line in the tub.

Please set the time and date before using the SPA control system.

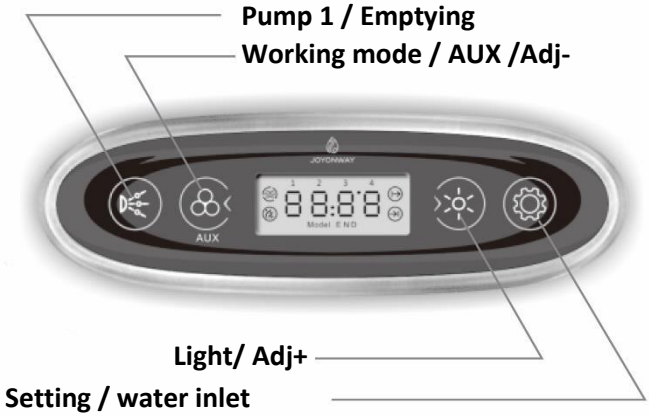



I. Functions

Pump 1 **Pump 1**

If the control system is switched on and is not in idle mode and pump 1 is set as a single speed pump, press the button to switch pump 1 on and off. If pump 1 is set as a double speed pump, press the button to control the low speed, high speed and switch off of pump 1. Pump 1 switches off automatically after a certain time.

Drain **Drain**

If the control system is switched on and is not in idle mode, press the button for two seconds to control the switching on and off of the drain solenoid. When the drain solenoid is switched on is displayed on the main interface. "

Pump 2  Pump 2

If the control system is switched on and is not in idle or setting mode, press the button to switch pump 2 on and off.

Pump 2 switches off automatically after it has been running for a certain time.

Blower  Blower

If the control system is switched on and is not in idle or setting mode, press the button to switch the fan on or off.

The blower function switches off automatically after it has been running for a certain time.

Manual cycle pump  Manual cycle pump

If the control system is switched on and is not in idle or setting mode, press the button to control the pump for manual operation.

If the heating cycle pump or the timed water cycle or pump 1 is started, the cycle pump cannot be switched off manually.

The manual cycle pump switches off automatically after it has been running for a certain time.

Working mode  Working mode

If the system is switched on and is not in setting mode, press the button for 2 seconds to switch to working mode.
The system has three operating modes (the system switched on is considered the standard mode by default):

Standard mode (LCD display model N): The heating function is active for 24 hours. If the system time falls within the set period for the water cycle, the filter function for the water cycle is activated.

Standard mode (LCD display model E): If the system time falls within the set period of the water circuit, the filtered water circuit function is valid; if the system time falls within the set period of the heating function, the heating function is valid. If the system time is outside the set period, the anti-freeze function is started.

Sleep mode (LCD display model D): The anti-freeze function is started and other loads are switched off and cannot be controlled via buttons.

Light Light

If the control system is switched on and is not in sleep mode or setting mode, press the button to control the light. Press the button for 2 seconds to switch the light off briefly. The light switches off automatically after 2 hours of operation.

The light has two modes. In On/Off mode, the light is switched on and off. In RGB mode, the control is regulated as follows:
State 1: automatic colour change (colour change between state 2 to state 8 in the cycle)
Condition 2: Red
State 3: Green
Condition 4: Yellow
Condition 5: Blue
Condition 6: Purple
Condition 7: Cyan
Condition 8: White
State 9: switch off

Water inflow Water inlet

If the control system is switched on and is not in idle mode, press the button for 2 seconds to control the water inlet solenoid. When the water inlet solenoid valve is switched on, is displayed on the main interface.

If water is detected in the system, the water inlet solenoid switches off automatically.

Freezing proof Freeze protec-

If the water temperature is less than 6 °C (43°F), the heating is switched on. When the temperature reaches 10° F (50° F), the heating is switched off.

Water level sensing Water level detection

If the control system is equipped with a water level detection function, the pump, the circulation pump and the heating can only be started if water is present. If no water is detected during normal operation, the consumers mentioned are switched off.

Timing water cycle Time measurement of the water

If the system is operating in standard and economy mode, the water cycle timer is valid. In sleep mode, the time control for the water cycle is invalid.

The control system has two time periods for setting the water cycle. Please set the two time periods before use.

If the system time falls within one of the time periods, the water cycle is started. If the system time is not in either of the two time periods, the water cycle is switched off.

Ozone Ozon

The ozone is switched off when the pump, fan, water inlet or draining is started.

If the pump, fan, water inlet and drainage are switched off and the heating pump or the timed water cycle is started, the ozone is switched on automatically. If both the heating circuit pump and the timed water cycle are switched off, the ozone is switched off automatically.

Heating Hea-

The heating function is started automatically in standard mode. In economy mode, it is started at set intervals. In sleep mode, it is started when the temperature is below 6 °C.

When the heating function is started and water is detected (if the system is equipped with a water level detection function), the heating circuit pump is started prematurely and then the heating is switched on; if the heating is switched off, the heating circuit pump is switched off after a while.

II. Setting

Temperature unit Temperature unit

If the system is switched on and is not in setting mode, press and "" "" simultaneously for 2 seconds to change the temperature unit (°C or °F). The system then selects the temperature unit.

Temperature setting Setting the temperature

When the system is switched on, press unt "" temperature setting interface appears. The LCD display shows the temperature unit flashing. Press and to set the temperature value. The setting range is 10- 40° C (50-140°F)
The system saves the set temperature value.



Clock setting Setting the time

When the system is switched on, press unti e time is set.
The hourly value flashes on the LCD display. Then press
and o set the hourly value.



When the system is switched on, press u the minute setting of the clock can be called up. The minute value flashes on the LCD display. Then press and to set the minute value.

Timing heating time period setting Setting the heating duration



Heating period 1 Start time



Time control heating period 1 End setting



Time control heating period 2 Start time



Time control heating period 2 End setting

"1" and "2" in the LCD display stand for the time period "1" and the time period 2. and in the LCD display stand for the start and end time of the time setting

When the system is switched on, press the but " " til the interface for setting the heating time period is reached. Press and to set t time

The system automatically saves the value after the heating time has been set.

Timing water cycle time period setting Setting the time period for the water cycle



Heating period 1 Start time



Time control heating period 1 End setting



Time control heating period 2 Start time



Time control heating period 2 End setting

"1" and "2" in the LCD display stand for the time period "1" and the time period "2" a in th .CD display stand for the start and end of the time period.

When the system is switched on, press the button "" button until you reach the setting for the water cycle time. The corresponding time value will flash. Press and to set time

The system automatically saves the value after setting the time for the water cycle.

III. Error message

Error code	Error description	Solu-
E1	**Malfunction of the temperature sensor**	**Please check the temperature sensor and its connection output.**
E2	**Exceeding the normal temperature range**	**The system detects an excessively high temperature at the temperature sensor. This happens when there is no water or the water flow in the heating pipe is too low and the heating function is started. Make sure that there is water in the whirlpool tub. If the error occurs frequently over several days, please contact the manufacturer or the dealer for technical assistance. If the temperature determined by the temperature sensor is too low, please check the frost protection.**
E4	**Switching off the thermostat**	**If the thermostat switches off, this indicates that the temperature in the heating pipe is too high. When the heating is started, this error can occur if there is no water or the water flow in the heating pipe is too low. Make sure that there is water in the whirlpool tub. If this error occurs frequently, please contact the manufacturer or dealer for technical assistance.**
E5	**Malfunction in the communication between control panel and box**	**Please check the connection between the control panel and the control box. Replace with new ones if necessary.**

Initial commissioning and changing the filter

Hint

Attention! The filter is wrapped in foil and is located in the filter housing. It must be removed from the film before use

Loosen the screw of the filter housing.




Then push the cover upwards and pull the second cover out of the housing.




Loosen the cartridge by turning it slightly and remove it from the filter housing.


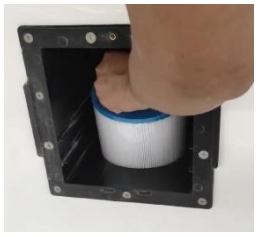

Insert the new filter into the filter housing.


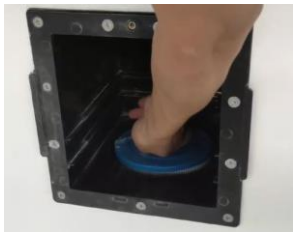

Insert the two covers and close the filter housing.




Water drainage of the product

	The product is equipped with a drainage device. This is attached to the side of the outer apron. Pull out the drain device.
	No water escapes in this position. Unscrew the cover cap.
	Press the screw cap towards the apron so that the water can drain away. Close the drain in reverse order.
	For water drainage via a hose, screw this adapter onto the screwing device.

6. Maintenance and care

6.1. Safety instructions

Risk of injury
Improper handling during operation can lead to injuries



- Improper handling can lead to considerable personal injury and damage to property. Therefore, maintenance may only be carried out by qualified persons.
- **Danger to life due to electrical voltage**: Repair and maintenance work on the electrical system may only be carried out by a qualified electrician.
- Before cleaning/maintenance/care, switch off the power supply to the product and remove the plug from the socket.
- Use a neutral cleaning agent to clean the product. Do not use any acidic, highly alkaline cleaning agents or organic solvents (e.g. alcohol, chlorine, Tiana water, ammonia, acetone, etc.) for cleaning.
- Use a soft cleaning cloth.
- Clean the nozzle regulators on the edge of the product with water only and then dry them carefully.
- If the product is not used, whether filled with water or empty. We recommend putting on the thermal cover. This prevents rapid soiling.
- Do not remove the apron of the product and do not carry out any maintenance work without a competent specialist.

Tips for winterising the pool

Switch on the energy mode, as the whirlpool tub has a frost protection function to prevent it from freezing.

Do not disconnect the whirlpool tub from the power supply and use the thermal cover.

Add some hot water when using the product to shorten the warm-up time and prevent damage to the thermal appliances.

If the product is not used for a longer period of time due to cold weather, it is recommended to drain the water and switch off the power.

This prevents the pipes and pumps from freezing.

Cover the product with a thick cloth before putting on the cover.

Water care with oxygen tablets

Many bacteria multiply very quickly in warm water and can cause illnesses. To kill these, regular cleaning is recommended before using the product. The water purification tablets can be purchased commercially.

7. Dismantling

7.1. Safety instructions

Risk of injury
Improper handling during disassembly can lead to injuries



- Disconnect the product from the power supply before dismantling. Contact with live components can result in an electric shock, which can cause burns or death.
- The product has a high weight and large dimensions, at least 2 - 3 persons are required for disassembly.
- Secure the product before disassembly.

Disassembly of the product must be carried out in reverse order to assembly. (**see chapter Assembly**)

8. Waste disposal



- Dispose of the product and all components in accordance with local and country-specific regulations to prevent damage to the environment.
- Our packaging is made from environmentally friendly materials. They can be recycled and thus serve as valuable raw materials. Dispose of the packaging material (cardboard, dirty packaging, etc.) separately and professionally in accordance with the applicable national regulations.
- Contact the manufacturer if you are unsure about disposal.
  You can also obtain information on proper disposal from the local waste disposal centres.

Electrical and electronic equipment - Information for private households

The Electrical and Electronic Equipment Act (ElektroG) contains a large number of requirements for the handling of electrical and electronic equipment. The most important ones are summarised here.

1. Separate collection of old appliances

Electrical and electronic appliances that have become waste are referred to as old appliances. Owners of old appliances must dispose of them separately from unsorted municipal waste. They must separate used batteries and accumulators that are not enclosed in the old appliance, as well as lamps that can be removed from the old appliance without destroying them, from the old appliance without destroying them before handing them in at a collection point. Separate old appliances in order to prepare them for reuse.

2. Options for returning old appliances

Owners of old appliances from private households can hand them in at the collection centres of the public waste disposal authorities or at the take-back centres set up by manufacturers or distributors in accordance with the ElektroG. An online list of collection and take-back centres can be found on the website: https://www.stiftung-ear.de or https://www.take-e-back.de.

3. Data protection notice

Old devices often contain sensitive personal data. This applies in particular to information and telecommunications technology devices such as computers and smartphones. In your own interest, please note that each end user is responsible for deleting the data on the old devices to be disposed of.

4. Take-back obligation of distributors

Distributors with a sales area for electrical and electronic equipment of at least 400 m^2 and distributors of foodstuffs with a total sales area of at least 800 m^2 who offer electrical and electronic equipment and make it available on the market several times per calendar year or on a permanent basis are obliged to fulfil this obligation,

- when supplying a new electrical or electronic appliance to an end user, to take back free of charge at the place of supply or in the immediate vicinity an old appliance of the end user of the same type that essentially fulfils the same functions as the new appliance, and
- at the end user's request, to take back waste electrical and electronic equipment that does not exceed 25 cm in any external dimension free of charge in the retail shop or in the immediate vicinity; the take-back may not be linked to the purchase of an electrical or electronic appliance and is limited to three waste appliances per type of appliance.

5. Meaning of the "crossed-out wheelie bin" symbol

The symbol of a crossed-out dustbin regularly shown on electrical and electronic appliances indicates that the appliance in question must be collected separately from unsorted municipal waste at the end of its service life.

- Manufacturer registration number

We are registered as a manufacturer within the meaning of the ElektroG with the responsible foundation Elektro-Altgeräte Register (Nordostpark 72, 90411 Nuremberg) under the following registration number: WEEE reg. no. DE86467979

Home Deluxe GmbH
Schanzeweg 2
32312 Lübbecke
Germany
Tel: +49 (0)5743 6181-0
www.home-deluxe-gmbh.de

ga-261-00_nimbus
2024/07